Hy-Security Gate Operators

HVG 420 VERTICAL LIFT GATE OPERATOR

Manufacturers and Designers of Hydraulic Systems

IMPORTANT

SAFETY INSTRUCTIONS

For Gate Operating Systems

Entrapment Zone

Pinch Point

Safety Alert Symbol

Read These Safety Instructions Before Installation

Hy-Security Gate Operators

Phone: 1-800-321-9947 • FAX (206) 286-0614 • Internet: www.hy-security.com • Email: info@hy-security.com

Important – Read before Installation

Safety Information for Powered Vehicular Gates

Automatic Gate Operators provide convenience and security to users. However, because these machines can produce high levels of force, it is important that all gate operator system designers, installers and end users be aware of the potential hazards associated with improperly designed, installed or maintained systems. Keep in mind that the gate operator is a component of the total gate operating system. It is the joint responsibility of the specifier, designer, purchaser, installer, and end user to verify that the total system is safe for its intended use. Be aware that entrapment in a moving vehicle gate can cause serious injury or death.

Safety considerations for system designers, installers and users

- Powered vehicle gates are not intended for pedestrian use. Always provide a separate pedestrian gate.
- Always specify or sell, as part of a complete and proper installation, the additional sensing devices, protective wheel covers and electrical disconnect switches that can aid in reducing risk to pedestrians in the area.

Install an operator only when Safety Items below are verified

- A separate pedestrian access gate has been provided at a safe distance from the vehicle gate.
- The gate operator is marked as appropriate for the type and usage class of the gate.
- The operator has not been modified for a different use, or to perform a different function than intended.
- External sensors must be installed to help protect pedestrians from accidental entrapment in both directions of the gate travel.
- There must not be any operating controls within six feet of the gate.
- The hazard warning signs, provided with an operator, must be installed on both sides of the gate.
- The gate is installed and operates so that there is sufficient clearance between the gate and adjacent structures, while both opening and closing, to minimize the risk of entrapment.
- The gate operator must not be installed on the public (non-secured side) of the gate.
- An automatic swinging gate must not open into a public area.
- Always be certain the gate operator is properly electrically grounded.
- Article *430-101* of the National Electric Code requires installation of an electrical disconnect means within sight of the gate operator.

Note: Special Safety requirements for Horizontal sliding gate systems:

- Construct horizontal sliding gates with all openings guarded or screened, so that a 2 1/4" sphere will not pass through any opening in the gate from the ground to a minimum height of 4 feet. The 2 1/4" opening restriction also applies to the portion of the adjacent fence that the sliding gate covers when it is in the open position.
- Always construct and install a sliding gate to minimize the gap between the gate and the fence.
- Always cover all exposed rollers and wheels.
- Always install physical stops to limit the maximum travel of a gate.
- The gate must move freely in both directions. Never overtighten a clutch or relief valve to compensate for a stiff gate.

Important safeguards and instructions to communicate to owner/users

- Explain that a gate can start suddenly without advance warning.
- Instruct the owner/users how to operate an automatic gate correctly and safely.
- Instruct the owner/users to not allow pedestrian use of the automatic gate.
- Instruct the owner/users to never allow children to play around the gate, or to have access to operating controls of the gate.
- Instruct owner/users how to disconnect power from the gate.
- Instruct owner/users how to manually release the operator from the gate.
- Instruct owner/user to contract a professional service company for regular routine maintenance and safety checks to assure continued correct function.

Hy-Security Gate Operators
Phone: 1-800-321-9947 • Fax: 920) 286-0614 • Web: www.hy-security.com • 1200 W Nickerson St • Seattle, WA. 98103

HVG Series, Hydraulic Vertical Lift Gate Operators Application Chart

To offer the greatest flexibility in design, we have created several models of the HVG operator series. The chart below should help you through the several choices. Standard lifting towers are 24' high. If your design calls for heavier than standard gate weights, taller lifting towers are available. *(Counterweight materials are not included with the operators.)*

HVG 420 Series, 10" square steel lifting towers.	This operator series will lift gates, of any construction, up to 1,000 pounds. The speed of this operator is one foot per second.
HVG 420 EX	This operator will also move 1,000 pound gates, but travels at two feet per second.
HVG 460 Series, 12" square steel lifting towers.	This operator series will lift gates, of any construction, up to 2,000 pounds. The speed of this operator is one foot per second.
HVG 460 EX	This operator will also move 2,000 pound gates, but travels at two feet per second.

SPECIAL NOTE: HVG Operators are available in D.C. battery operated versions. Battery chargers are included and battery packs are available in 2 battery or 4 battery versions to provide many cycles of operation.

HVG 420

HEAVY DUTY INDUSTRIAL/COMMERCIAL

HYDRAULIC VERTICAL LIFT GATE OPERATOR

HVG 420 STANDARD FEATURES:

* **Heavy Duty Components** - Lifts gate panels of any construction weighing up to 1000 pounds
* **Minimal Side Room Required** - Apply between buildings or where space is limited
* **Versitile** - Widths limited only by construction of gate panel and total weight
* **Smooth Operation** - "Auto level" system prevents "keystoning"
* **Remote Power Pack** - Power pack and electric panel remotely located
* **High Clearance** - Sixteen feet clear height, standard
* **One or Two Foot Per Second Travel** - depending on the operator specified
* **U.L. Recognized** - All electrical components are recognized
* **Extended Warranty** - Five years limited warranty

OTHER MODELS AVAILABLE:

HVG EX
High speed version, up to 2 feet per second.

HVG 460
Same features as the HVG 420 plus additional features allowing operation of gates weighing in excess of 2000 pounds.

***QUALITY* SWING, SLIDE, AND BARRIER ARM OPERATORS**

ALSO AVAILABLE FROM

HY-SECURITY GATE OPERATORS

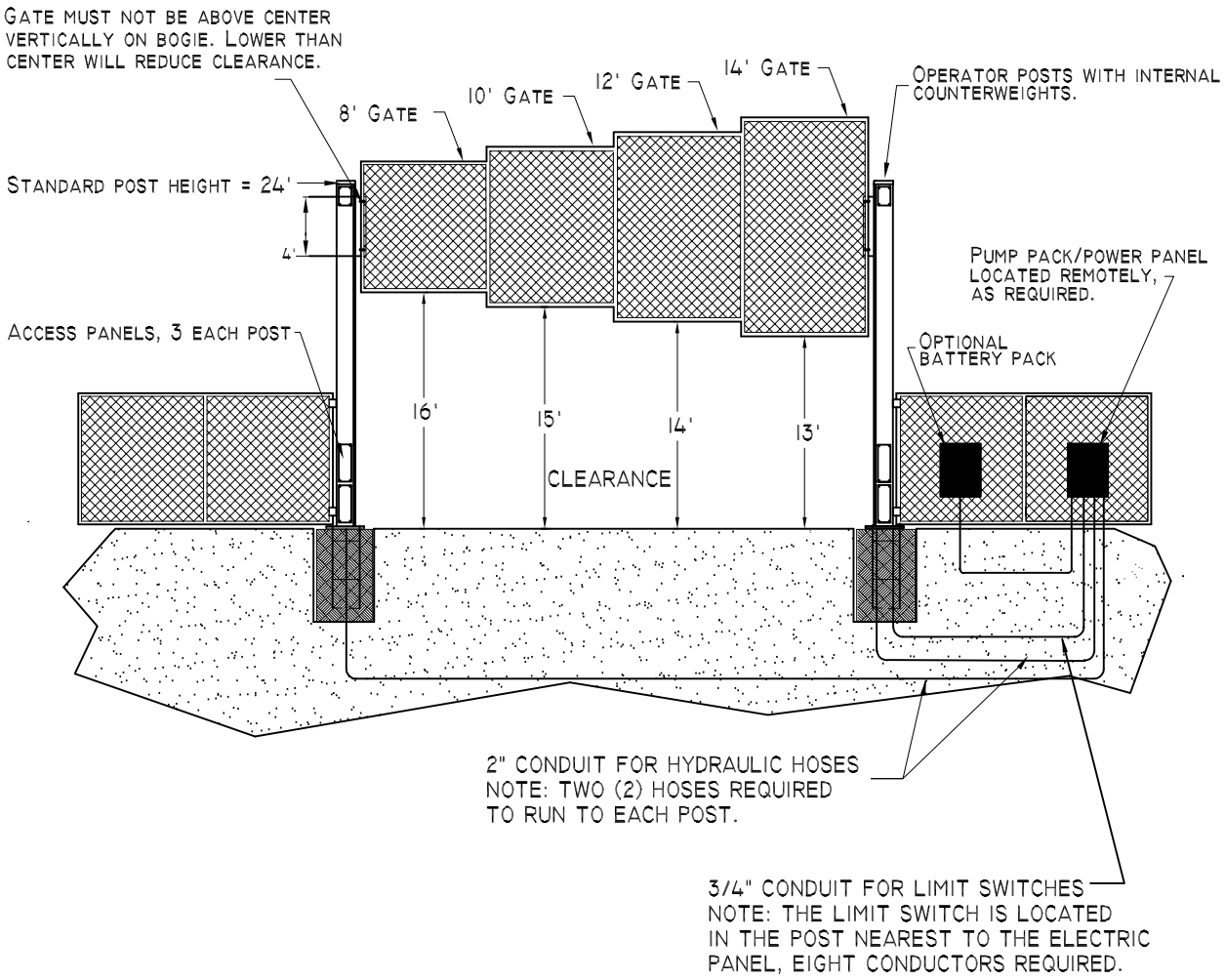

NOTES:

POSTS MUST BE SET PLUMB SQUARE WITH EACH OTHER.

POSTS HEIGHT MAY BE INCREASED AT EXTRA COST.

MINIMUM FOOTING = 36" X 36" X 72" DEEP. LARGER FOOTINGS MAY BE REQUIRED. CONSULT ENGINEER FOR EFFECTS OF WINDLOADING AND SOILS ON STABILITY AND PERFORMANCE.

SEE DRAWING HV34 FOR POST DETAILS.

SEATTLE, WASHINGTON	TITLE: VERTICAL LIFT OPERATORS TYPICAL ELEVATIONS	DRAWN: KERI	DATE: 6/13/00	THIRD ANGLE PROJECTION	REV: --
		CHECKED: SHOP	DATE: MM/YY/DD	PART NUMBER: N/A	
		APPROVED: ENGRNG	DATE: MM/YY/DD	DRAWING NUMBER: HV35	SHT 1 OF 1

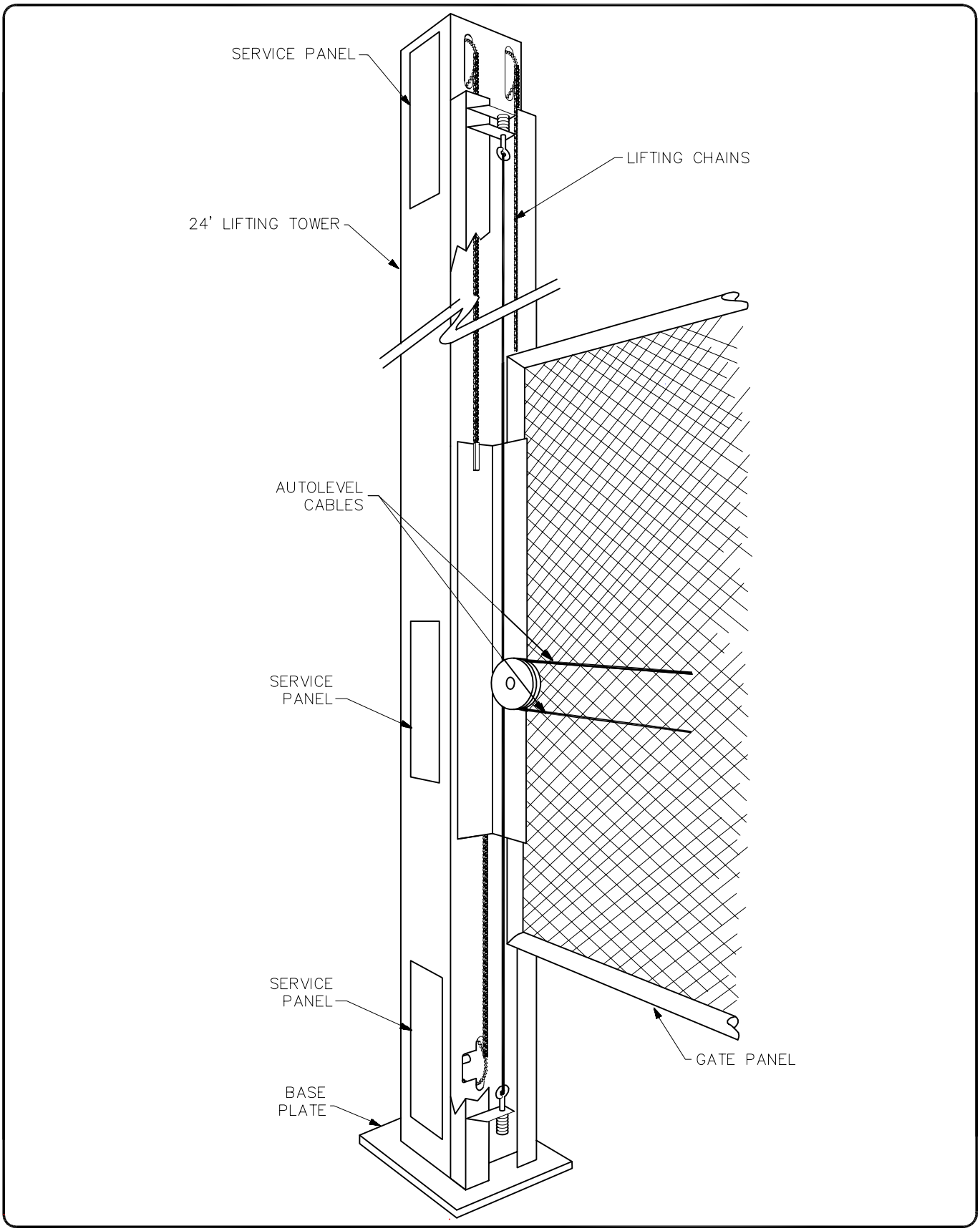

Hy-Security Gate Operators SEATTLE, WASHINGTON	TITLE **CUTAWAY VIEW OF VERTICAL POST AND COMPONENTS**	DRAWN D. B.	DATE 05/10/00	THIRD ANGLE PROJECTION	REV A
		CHECKED -	DATE -	ERN NUMBER - / DATE -	
		APPROVED -	DATE -	DRAWING NUMBER: HV14	SHT 1 OF 1

MINIMUM FOOTING = 36" X 36" X 72" DEEP OR TO THE FROST LINE WHICHEVER IS GREATER.

CAUTION: LARGER FOOTING MAY BE REQUIRED. BE CERTAIN TO CONSULT AN ENGINEER FOR EFFECTS OF WINDLOADING AND SOILS ON STABILITY AND PERFORMANCE.

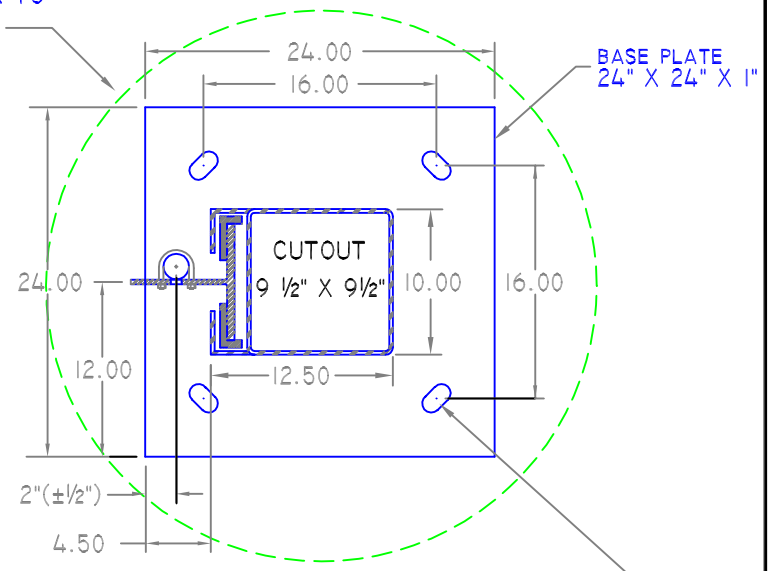

NOTE: A WELDED ANCHOR CAGE WITH FOUR 1" X 48" BOLTS ARE PROVIDED FOR EACH POST. BOLTS ARE GALVANIZED AND READY TO PLACE.

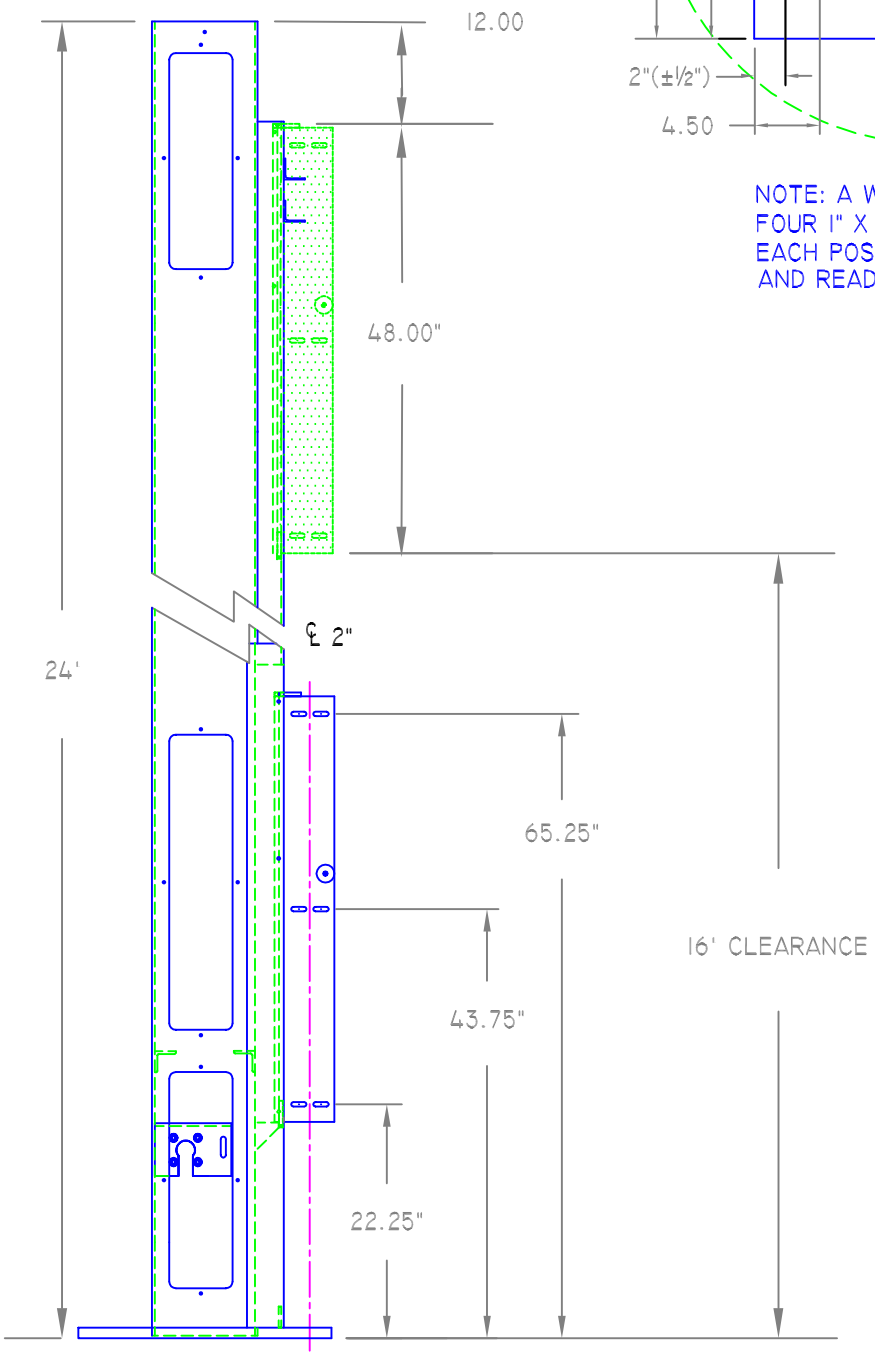

HY-Security Gate Operators, SEATTLE, WASHINGTON	TITLE: HVG 420 POST PLAN AND POST (DETAIL)	DRAWN: KERI	DATE: 6/13/00	THIRD ANGLE PROJECTION	REV: --
		CHECKED: SHOP	DATE: MM/YY/DD	PART NUMBER: N/A	
		APPROVED: ENGRNG	DATE: MM/YY/DD	DRAWING NUMBER: HV34	SHT 1 OF 1

Hy-Security Gate Operators
Phone: 1-800-321-9947 • Fax: (206) 286-0614 • Web: www.hy-security.com • 1200 W Nickerson St • Seattle, WA. 98119

INSTALLATION INSTRUCTIONS
HVG VERTICAL LIFT GATE OPERATOR

1. The concrete footings for the vertical lift posts must be very substantial. An engineer should be retained to specify the appropriate footing considering the soil conditions, size of the gate and wind load.

2. The anchor bolts are supplied by Hy-Security as a pre-welded cage and must be installed before the post footings are poured. Contact Hy-Security if the anchor bolt cages are required in advanced of the posts.

3. Place a nut and flat washer onto each of the threaded anchor bolts protruding from the post foundation. Screw the nuts down until only two or three threads are showing under the nut. Lay the washer on top of each nut. Verify that you have enough threads left to project through the base plate and allow for another washer and nut on top.

4. Mount the HVG posts onto the foundation. The two HVG posts must be square with each other across the opening. The removable access panels are designed to face the protected side of the opening. The HVG post with the rotary limit switch should be on the same side of the roadway as the controller panel.

5. Place a second washer and nut onto each threaded anchor bolt to lock the posts in place. Before final tightening, it is critical to verify that the posts are square with each other and that are perfectly level and plumb. Use a plumb bob or a six foot minimum level to assure the posts are plumb. Use the locking nuts to achieve "plumb" in both directions and twist the posts (notice the curved slots in the base plate) to achieve "square" with the other post.

6. Mount the controller box on the wall or fence line near the HVG post. The controller panel should be within 50 feet of the post that contains the rotary limit switch.

7. Entrapment Protection - Minimum Safeguards:

A. Since automatic gates are not intended for pedestrian use, always install a separate pedestrian walkway and access gate. Install signs which direct persons to use the pedestrian gate, and to not enter through the vehicle gate.

B. Be certain that the gate has been constructed such that the opportunity for persons to reach through any opening have been minimized.

C. Be certain that all access controls are located at least a six foot distance from the gate, to reduce the possibility of any attempt to reach through in order to operate the gate.

D. Be certain to mount at least two of the enclosed 8 1/2" x 11" warning placards on each side of the gate to warn users of the hazards of a power operated gate.

E. **Button Station Operation:** Be certain to mount a warning placard near each button station that warns that the area must be clear before operating the gate. If there are no entrapment protection sensors to guard the closing operation of the gate, the push button station must be wired for constant hold operation only. This is achieved by cutting jumper wires in the control circuit, see drawing E63VT2.

F. **Automatic Operation:** Entrapment protection sensors must be installed to guard the closing of the gate. Install photo electric eyes, or attatch edge sensor to create a reversing function. All sensors guarding the closing direction connect to terminals #1 and #6 in the control box.

Caution: Vehicle detectors are not entrapment protection sensors.

8. Connect appropriate power wiring. Be certain to oversize supply conductors to allow for voltage drop, especially for single phase machines. Follow the wire schedules (drawing #E16a, b). Route conduit to the control box. Wirenut the supply power wires to the loose wires at the back of the on/off switch. Be certain to connect a ground wire.

Hy-Security Gate Operators
Phone: 1-800-321-9947 • Fax: (206) 286-0614 • Web: www.hy-security.com • 1200 W Nickerson St • Seattle, WA. 98119

HVG LIMIT SWITCH, SETTING / WIRING INSTRUCTIONS

1. For all HVG operators, eight conductors are required from the limit switch to the control panel.

2. The limit switch is pre-set at the factory, to limit full travel in both directions. Fine tuning may be required in the field, to suit conditions.

3. To adjust the limits:

a. Loosen the cam clamp screws.
b. Depress the pinion gear, near the switch, engaging the gear teeth.
c. Rotate the cam to trip the limit switch, several inches before full gate travel, to allow the gate to decelerate.
d. Tighten clamp screws.
e. Repeat steps "a" and "d", for each limit switch.

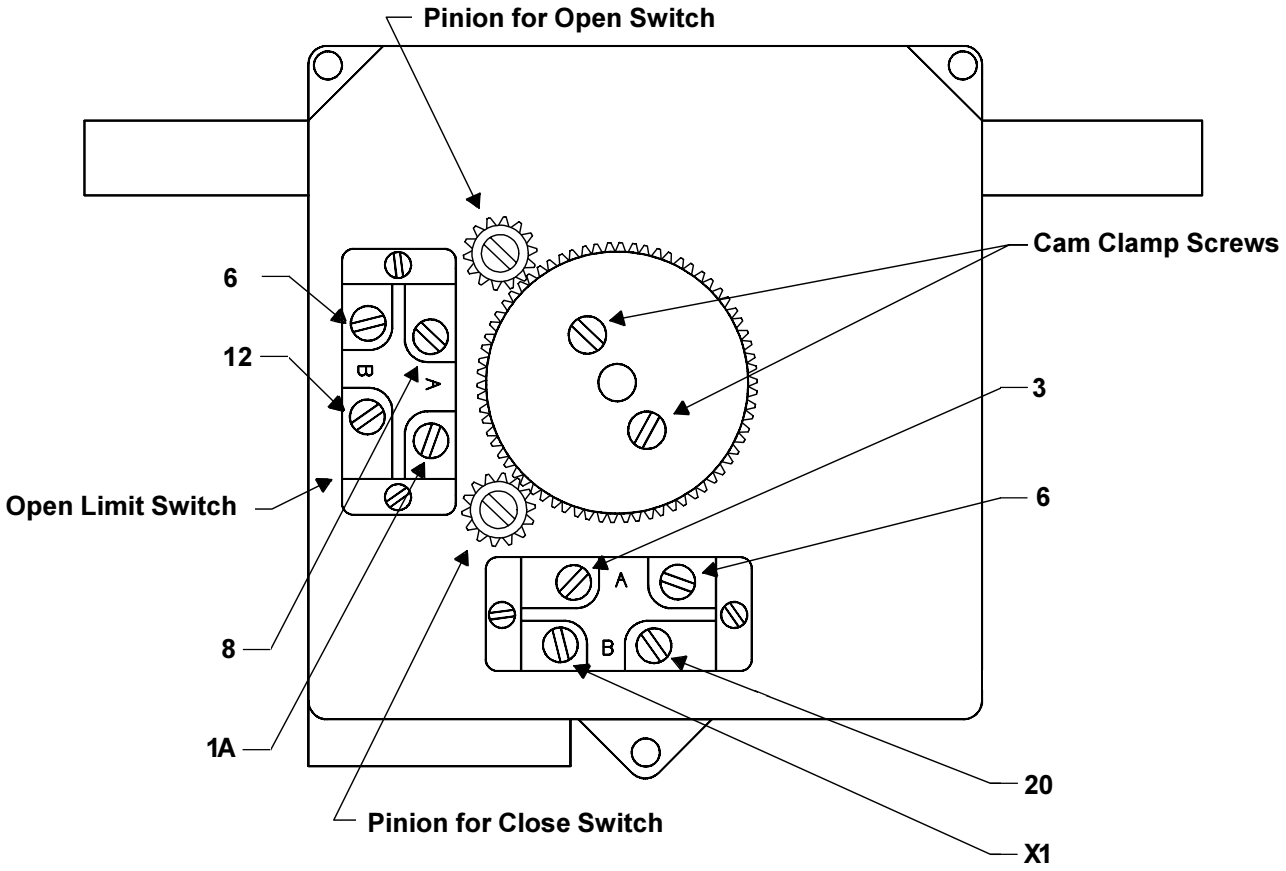

9. Connect wires between the rotary limit switch and the controller box according to drawing HV21. Connect the hydraulic hoses to the appropriate sockets. See drawing HV22 and pay close attention to the color coding on the hoses. The colors should match after hook-up. Run the operator to verify correct functioning. If the hydraulic hoses were inadvertently reversed, the gate will move in the opposite direction than commanded. If the limit switches were connected backwards, the operator would not stop when the gate reached it's full travel. Never reverse wiring to the push button station. Replace the plug in the hydraulic reservoir fill hole with the vent cap provided.

10. Remove the plastic shipping plug on the pump manifold near the motor and replace it with the vent cap supplied.

11. Run the operator to verify correct functioning. It is normal for the bogies to operate slightly out of synchronization.

12. If the motor runs but nothing moves, close the by-pass valve located near the electric motor or reverse any two poles of a three phase motor.

13. Temporarily place the gate panel into the opening on the outside side of the property. Before mounting, verify that the width of the gate does not exceed the dimension between the angle bogie guides. If the gate panel is too wide it will interfere with the smooth operation of the gate operator and may actually cause damage to the top covers of the HVG posts.

14. Remove the cap screw on the release sprocket located on the hydraulic motor in the bottom of each post. The lifting bogies are now free for adjustment so that they may be centered on the gate panel's vertical edge. Mount the gate panel to the bogies while being certain that no tension is applied that may cause a binding action during travel. Replace the cap screws in the sprockets. Be sure that they penetrate through the hole in the sprocket and that the heads are fully seated.

15. Install the 1/8" balancing cables using the supplied cable. Slip the ends with the loops into the upper eye bolts. Run cables under the white sheaves on the lifting bogies, across the face of the gate panel, over the opposite sheaves and to the bottom eye bolts. Use the cable clamps that are supplied to hold the cable in minimum tension. The cables should not hang loose, but the compression spring at the upper eye bolt should not be collapsed. Cut off excess cable.

16. The vertical lift must be fully counterweighted. The counter weight for each post should be equal to one half of the total weight of the gate panel. Remove the middle access cover located three feet above the ground. Operate the gate until fully open.*(see note at end of section) Stop the gate and shut power off. Load the counter weights into the weight cage which should now be visible through the access cutout. Sheared steel plate 1/2" or 3/4" thick and 7" square (10" square for HVG 460), makes an easy to handle counterweight material. It is easy to find and makes fine tuning a snap. **NOTE:**(one 7" x 7" x 3/4" plate weighs about 10 pounds and one 10" x 10" x 3/4" plate weighs 20 pounds.)

17. Operate the system a few times to verify that everything is working properly. Set the open and close limits as required. After testing the basic functions, connect any extra external control wiring and re-test for proper function.

***NOTE:**
Since there is no counter balance for the initial operation, it may be necessary to assist the gate in opening. If necessary, use a fork lift, block and tackle or manpower for this operation. If the hydralulic pump runs and the gate does not move during this operation, no harm is done. The pump will simply by-pass through the relief valve and send the fluid back to the tank.

18. Be certain to test the function of the entrapment protection sensors before completion.

For assistance, contact your local distributor.

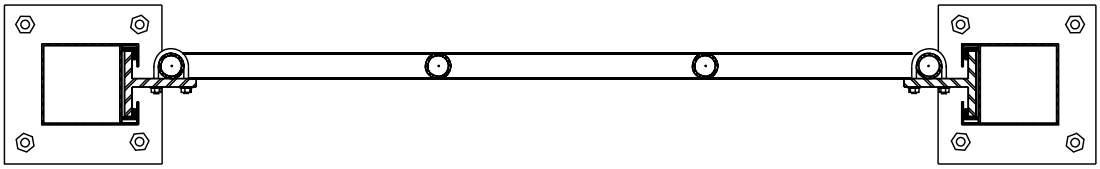

PLAN VIEW

HVG 420 VERTICAL LIFT GATE OPERATOR, SHORT FORM SPECIFICATION:

Operator shall consist of two structural, vertical steel towers and all necessary chains, sprockets weight cages and hydraulic motors to lift a gate vertically to a clear opening height of sixteen feet above grade. The operator shall also have a separate power package in a housing along with the electrical panel and controls, for remote location. Steel towers shall be finished at the factory with a zinc coating to provide maximum protection against corrosion. Lift chains shall be plated to assure corrosion protection. All internal parts shall be prime painted. "Bogies" shall be provided for lifting the gate panel. A system of balancing cables and fittings shall be provided to assure that the gate panel will remain level at all times during operation and can not become "keystoned" in the opening. "Bogies" shall be provided with bearing surfaces to assure that there is no metal-to-metal contact during operation. Only the finest materials and workmanship shall be used in construction of the gate operator. Units shall be fully tested prior to leaving the factory. The operator shall be warranted for a period of five years for defects in manufacturing and for defective parts. Labor to replace defective parts is not covered in the factory warranty. Hy-Security Gate Operators reserves the right to make engineering changes as they become available. Model numbers may change to reflect these changes.

Fully formatted specifications and detailed drawings are available upon request.

MANUFACTURED BY:

Hy-Security Gate Operators
1200 W Nickerson St
SEATTLE, WA 98119
(800)321-9947
FAX (206)286-0614

DISTRIBUTED BY:

Hy-Security Gate Operators
Phone: 1-800-321-9947 • Fax: (206) 286-0614 • Web: www.hy-security.com • 1200 W Nickerson St • Seattle, WA. 98119

Field Hose Measurements for HVG and HRG Operators

When field measuring for the necessary hose length to order, the following may be helpful:

There is little room in the base of the HRG or the HVG operators and limited room in the control/power panel, therefore, your field measurements must be very accurate when calculating the length of the necessary hydraulic hoses. If your dimensions are too little, you will not reach the connections, if your measurements are too long, you will have trouble finding space for the excess hose.

Remember that two hoses are needed for each motor or each cylinder. This means that you need four hoses when you are dealing with a HVG operator and also when you are installing a HRG 222 (pair) operator.

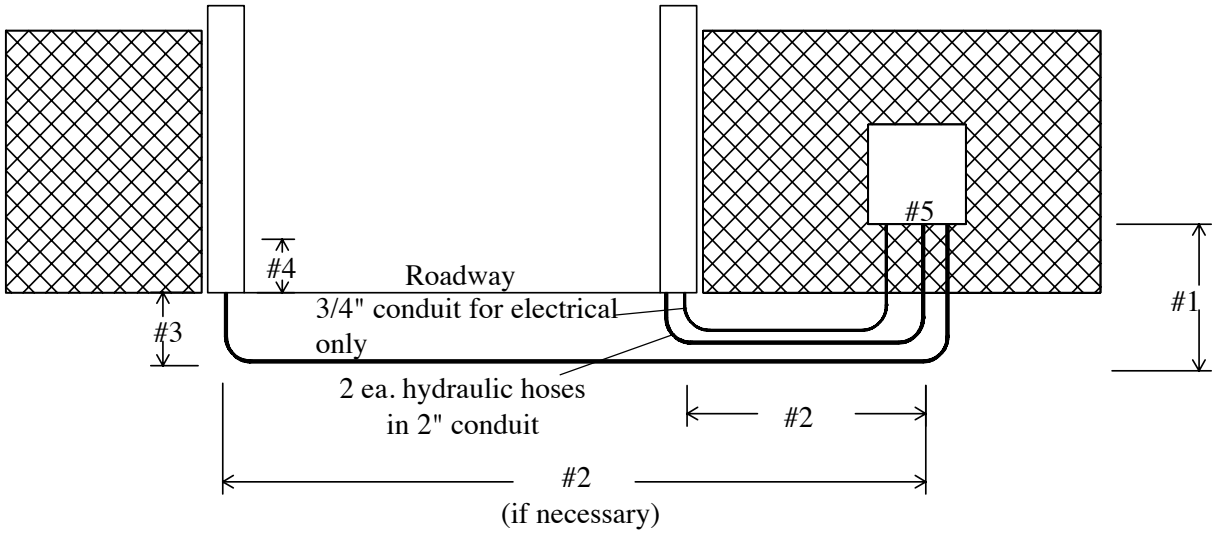

Be sure to measure accurately the following distances: (the best way is to pull a cord through the conduit, mark it, and then measure it.)

1. The bottom of the pump/control panel to the bottom of the trench.
2. The total distance across the trench.
3. The distance back up to the bottom of the operator.
4. Add approximately 6" for the hoses to reach up into the operator.
5. Add approximately 24" for the hoses to reach up into the power/control panel.

The part numbers for the hoses are:

1/4" hose for HRG: H SFHO 004 SW
3/8" hose for HVG: H SFHO 006 4216

For assistance call your distributor.

Hy-Security Gate Operators
Phone: 1-800-321-9947 • Fax: (206) 286-0614 • Web: www.hy-security.com • 1200 W Nickerson St • Seattle, WA. 98119

Hose Connection Diagram for Vertical Lift Gate Operators

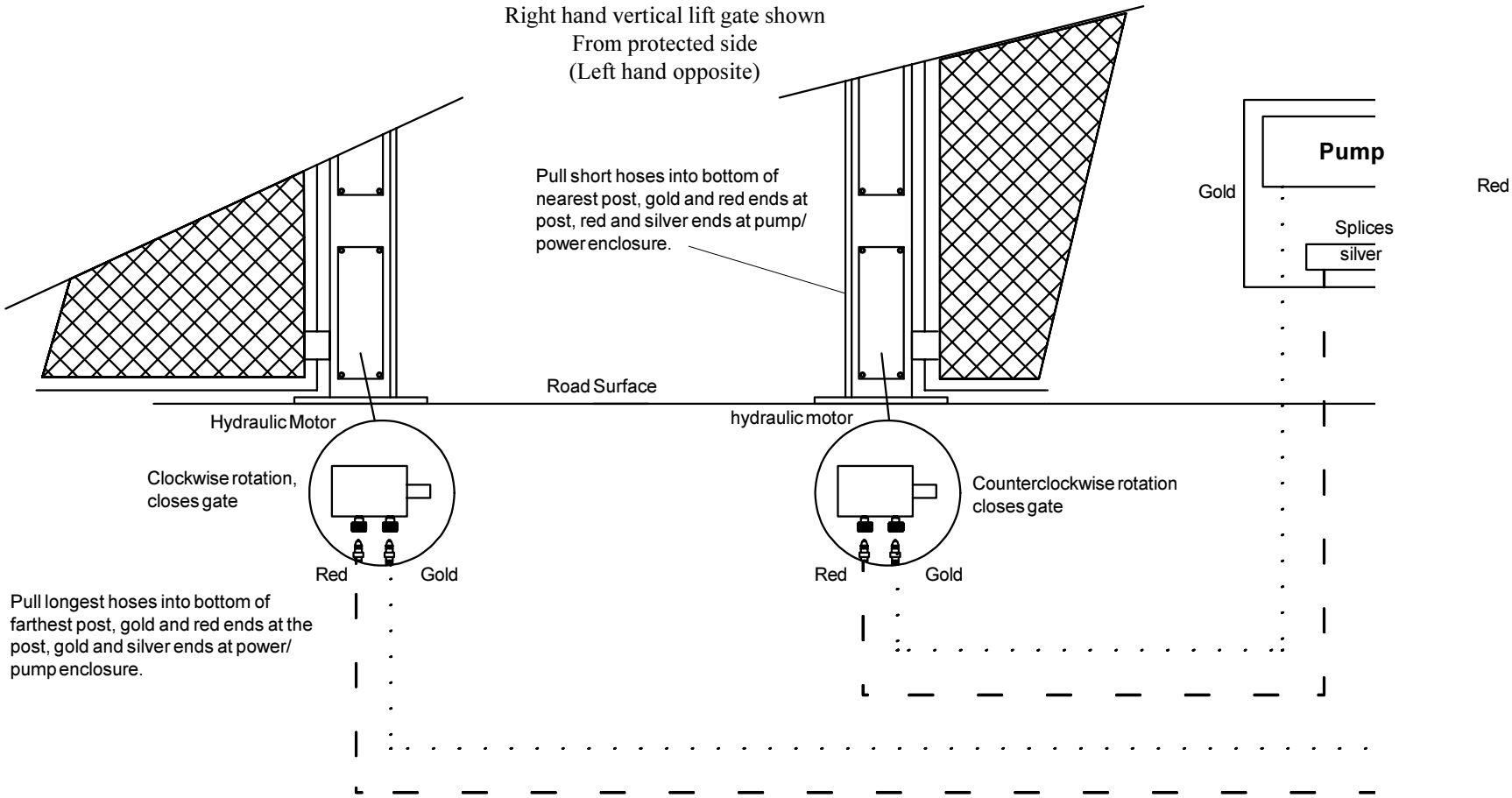

At posts, mate red to red and gold to gold. At power/pump enclosure, mate gold to gold and red to red on the pump and splice the two silver ends together with the connector that is supplied.

Hy-Security Gate Operators
Phone: 1-800-321-9947 • Fax: (206) 286-0614 • Web: www.hy-security.com • 1200 W Nickerson St • Seattle, WA. 98119

Wire Size Schedules

for $^1/_2$-hp through 5-hp motors

Supplying a gate operator with the right electrical service is crucial to the way the performance of the operator the life of its electrical components. If the wire size used is too small, the voltage loss—especially during motor starting—will prevent the motor from attaining its rated horsepower. The percent of horsepower lost is far greater than the percentage of the voltage loss. A voltage loss could also cause the control components to chatter while the motor is starting, substantially reducing their life due to the resultant arcing. There is no way to restore the lost performance resulting from undersized wires, except to replace them; therefore it is much more economical to choose a sufficient wire size at the initial installation.

The tables on the following page are based on copper wire and allow for a 5% voltage drop. The ampere values shown are the service factor ampere rating (maximum full load at continuous duty) of the motor.

Always connect in accordance with the National Electrical Code, article 430, and other local codes that may apply.

The maximum distance shown is from the gate operator to the power source; assuming that source power is from a panel box with adequate capacity to support the addition of this motor load. The values are for one operator, with no other loads applied to the branch circuit. For two operators applied to one circuit, reduce the maximum allowed distance by half.

Use this chart to determine maximum allowable control wiring distance. If the location required exceeds the distances listed on the chart at the right, addition of a long range interface will be neccessary.

Pushbutton Control Wiring	
16 ga	*125' Maximum*
14 ga	*200' Maximum*
12 ga	*300' Maximum*
10 ga	*500' Maximum*

Hy-Security Gate Operators
Phone: 1-800-321-9947 • Fax: (206) 286-0614 • Web: www.hy-security.com • 1200 W Nickerson St • Seattle, WA. 98119

Wire Size for Voltage Drop Over Distance

Wire Sizes for Power Wiring, Single Phase *Distances are shown in the unshaded boxes*

	115 V, SINGLE PHASE						*208 V, SINGLE PHASE*						*230 V, SINGLE PHASE*					
Amps	10.0	11.06	14.4	27.2	NA	NA	5.5	6.1	7.6	14.2	16.2	NA	5.0	5.8	7.2	13.6	14.8	27.0
Horse Power	1/2hp	3/4hp	1hp	2hp	3hp	5hp	1/2hp	3/4hp	1hp	2hp	3hp	5hp	1/2hp	3/4hp	1hp	2hp	3hp	5hp
12ga	90	75	60	30			290	260	205	110	100		350	300	245	130	120	65
10ga	140	120	100	50			460	415	330	175	155		560	480	385	205	190	105
8ga	220	190	155	80			725	650	525	280	245		880	760	610	325	300	165
6ga	350	300	245	130			1,150	1,040	835	445	390		1,400	1,120	975	515	475	260
4ga	555	480	385	205			1,825	1,645	1,320	710	620		2,220	1,915	1,550	815	750	410
2ga	890	765	620	330			2,920	2,630	2,110	1,130	1,000		3,550	3,060	2,465	1,305	1,200	660

Wire Gauge

Wire sizes for Power Wiring, Three Phase *Distances are shown in the unshaded boxes*

	208 V, THREE PHASE						*230 V, THREE PHASE*						*460 V, THREE PHASE*					
Amps	2.7	3.1	4.2	6.5	6.7	16	2.4	3.0	3.8	6.2	6.4	15.4	1.2	1.5	1.9	3.1	3.2	7.7
Horse Power	1/2hp	3/4hp	1hp	2hp	3hp	5hp	1/2hp	3/4hp	1hp	2hp	3hp	5hp	1/2hp	3/4hp	1hp	2hp	3hp	5hp
12ga	590	510	375	245	235	100	730	585	460	280	270	115	2,915	2,350	1,850	1,130	1,100	455
10ga	930	810	600	390	375	160	1,160	930	730	450	435	180	4,640	3,710	2,930	1,800	1,740	725
8ga	1,475	1,285	950	615	595	250	1,835	1,470	1,160	710	690	285	7,340	5,870	4,650	2,840	2,750	1,150
6ga	2,350	2,045	1,510	975	945	400	2,925	2,340	1,845	1,130	1,095	455	11,700	9,350	7,400	4,550	4,400	1,800
4ga	3,720	3,240	2,390	1,545	1,500	630	4,625	3,700	2,920	1,790	1,735	720	18,500	14,800	11,700	7,200	7,000	2,900

Wire Gauge

Always connect in accordance with the National Electrical Code, article 430, and other local codes that may apply.

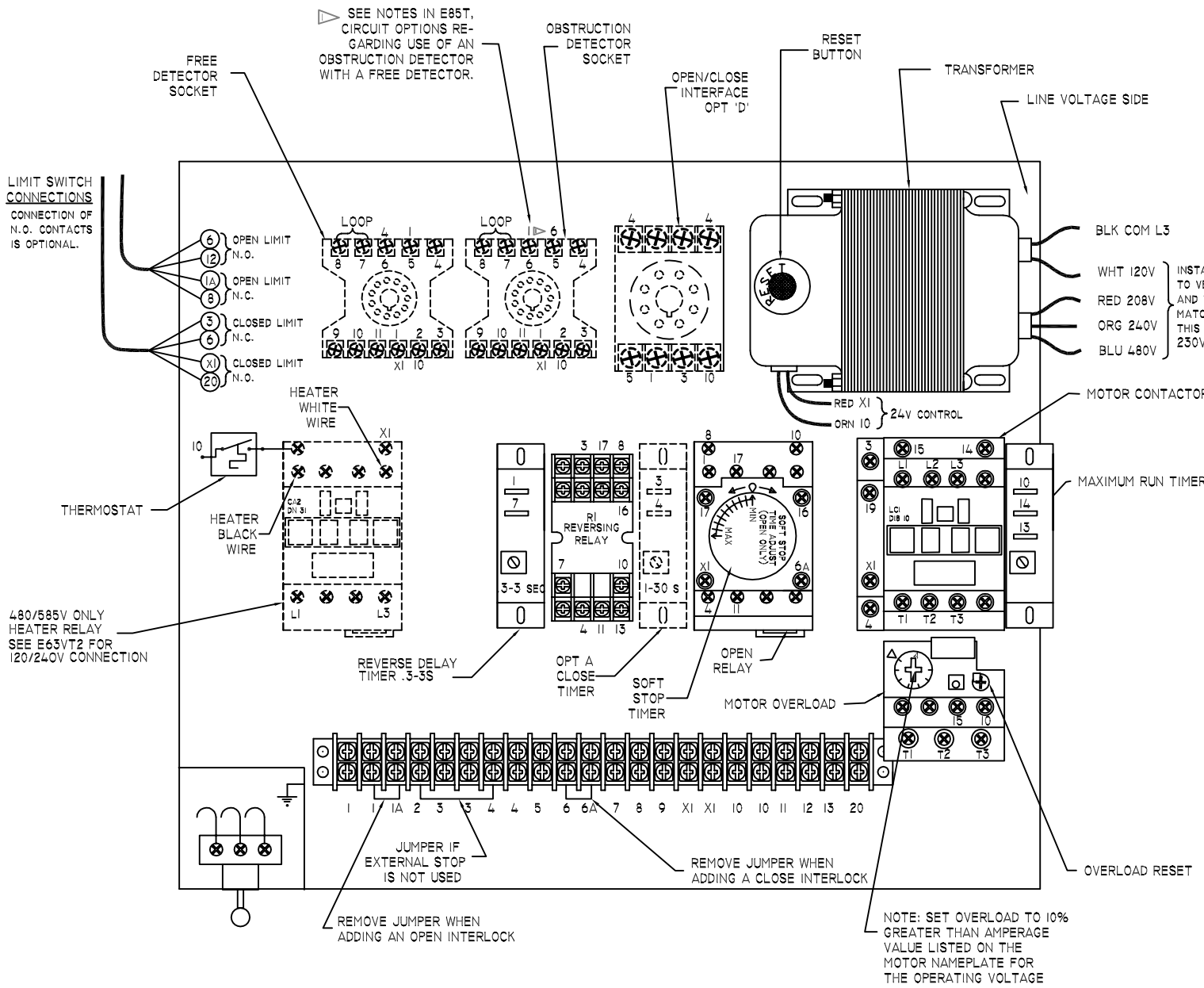

WIRE #	WIRE COLOR
1	BLUE
1A	WHITE
2	RED/YEL STRP
3	GREEN
4	BROWN
5	WHT/RED STRP
6	ORANGE
6A	YELLOW
7	GREY
8	VIOLET
9	RED/WHT STRP
X1	RED
10	BLACK
11	BLU/WHT STRP
12	WHT/BLK STRP
13	GRN/WHT STRP
20	BLK/WHT STRP
14	BRN/WHT STRP
15	ORG/WHT STRP
16	YEL/BLK STRP
17	GRY/BLK STRP
18	VLT/WHT STRP
19	BLU/RED STRP
21	RED/BLK STRP
22	GRN/BLK STRP
23	BRN/BLK STRP
24	ORG/BLK STRP
25	YEL/RED STRP
26	GRY/RED STRP
26A	VLT/BLK STRP

BE CERTAIN TO JUMPER 2-4 IF AN EXTERNAL STOP IS NOT USED.

Hy-Security Gate Operators
SEATTLE, WASHINGTON

TITLE:
ELECTRICAL COMPONENTS HVG VERTICAL LIFT OPERATORS EXCEPT NOT FOR DC VERSIONS

SEE ENGINEERING CHANGE PAGE FOR CURRENT REVISION NUMBER

DATE: 12/30/98	PART NUMBER: N/A
REV. NO: 0	PAGE 1 OF 1
REV. DATE: 0	DRAWING NUMBER: E21T2

Hy-Security Gate Operators
Phone: 1-800-321-9947 • Fax: (206) 286-0614 • Web: www.hy-security.com • 1200 W Nickerson St • Seattle, WA. 98119

Pressure Relief Valves
Adjustment Procedures

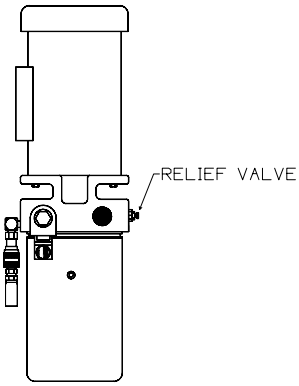

Side View

Model	Factory Setting
111 Series	750 psi
222 SS, E	1000 psi
222 EX	1300 psi
444 Series	1300 psi
HRG Series	1300 psi
HVG Series	2000 psi
HTG 360	1000 psi
HTG 320-6	1000 psi
HTG 320-3	1000 psi
HTG 320-2	700 psi

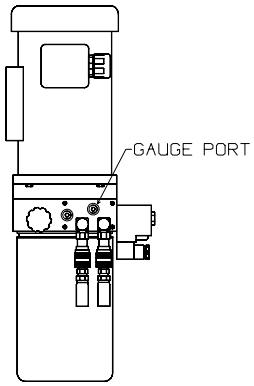

Front View

The relief valve can be found on the back side (gate side) of the hydraulic power unit. It is the only component located here and has a hex adjusting head and lock nut. To adjust setting, loosen the lock nut screw the threaded bolt CW for increased pressure, turn CCW to decrease pressure.

Pressure relief valves are preset at the factory to utilize maximum available horsepower. The relief valve can be lowered to smooth starting if necessary. This is most easily done by decreasing the pressure until the gate operation slows, and then increasing the pressure just enough to provide normal gate speed.

It must be understood that if you reduce the pressure setting, you will lose horsepower to move the gate if additional resistance (old gate hardware, snow and ice, etc.) is encountered.

Do not attempt to use the relief valve as an entrapment protection device. A photo eye or a gate edge is the best method to protect pedestrians and reserve power to drive the gate.

NOTES:

1. ANY REQUIRED CIRCUIT PROTECTION IS BY OTHERS.
2. LIMIT SWITCHES SHOWN WITH GATE IN TRANSIT AND CONTROLS DE-ENERGIZED.
3. NUMBERS IN CIRCLES INDICATE TERMINAL NUMBERS.
4. DASHED LINES INDICATE OPTIONAL WIRING.
5. IF THE THREE BUTTON STATION IS NOT USED JUMPER 2 TO 4 TO REPLACE STOP BUTTON.

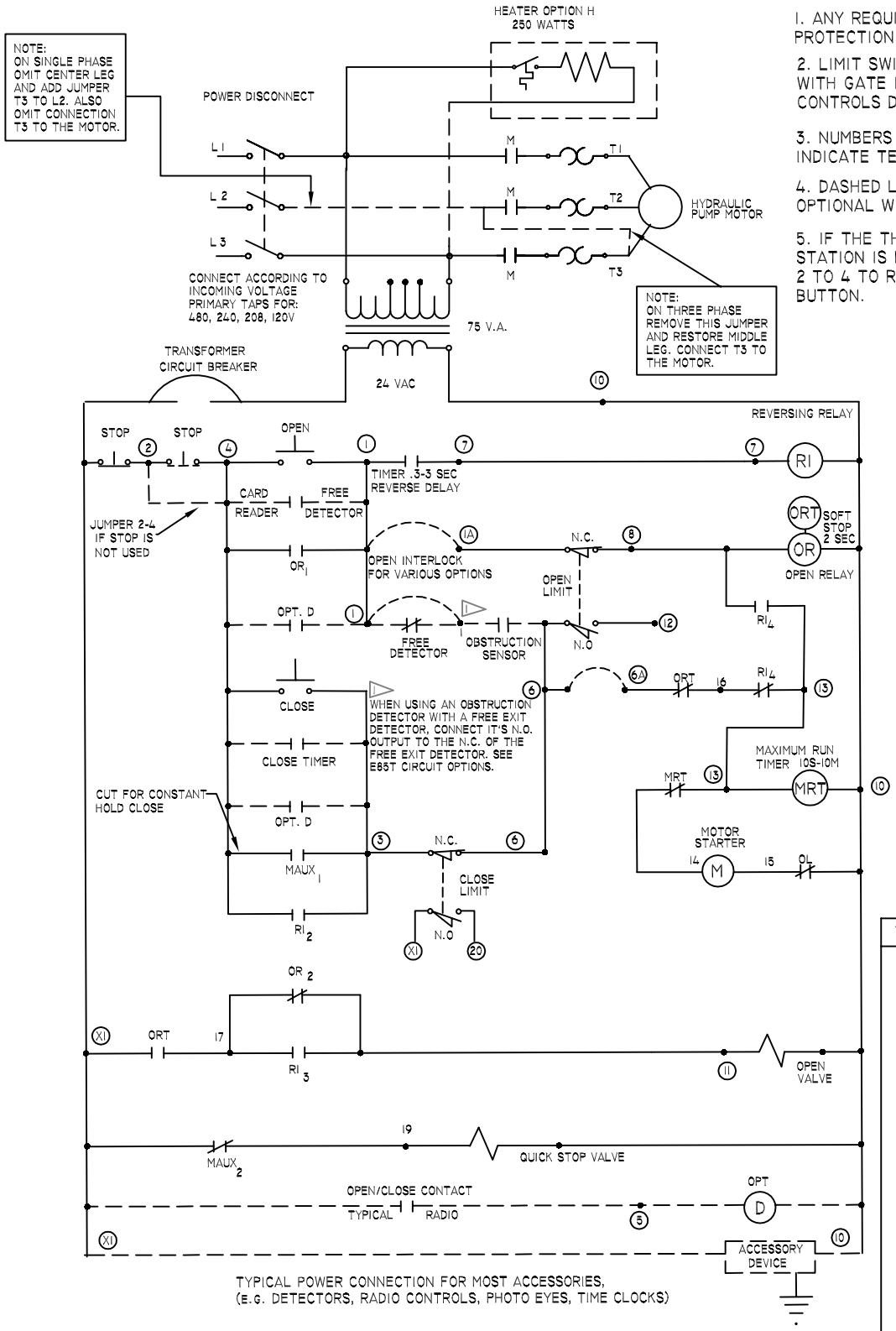

TYPICAL POWER CONNECTION FOR MOST ACCESSORIES, (E.G. DETECTORS, RADIO CONTROLS, PHOTO EYES, TIME CLOCKS)

BE CERTAIN TO JUMPER 2 - 4 IF EXTERNAL STOP IS NOT USED.

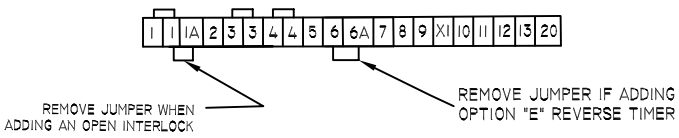

WIRE #	WIRE COLOR
1	BLUE
1A	WHITE
2	RED/YEL STRP
3	GREEN
4	BROWN
5	WHT/RED STRP
6	ORANGE
6A	YELLOW
7	GREY
8	VIOLET
9	RED/WHT STRP
XI	RED
10	BLACK
11	BLU/WHT STRP
12	WHT/BLK STRP
13	GRN/WHT STRP
20	BLK/WHT STRP
14	BRN/WHT STRP
15	ORG/WHT STRP
16	YEL/BLK STRP
17	GRY/BLK STRP
18	VLT/WHT STRP
19	BLU/RED STRP
21	RED/BLK STRP
22	GRN/BLK STRP
23	BRN/BLK STRP
24	ORG/BLK STRP
25	YEL/RED STRP
26	GRY/RED STRP
26A	VLT/BLK STRP

PART NUMBER: N/A
PAGE 1 OF 1
DRAWING NUMBER: E63VT2
DATE: 12/30/98
REV. NO: 0
REV. DATE: 0

LOGIC DIAGRAM FOR HVG VERTICAL LIFT OPERATORS EXCEPT NOT FOR DC VERSIONS

SEE ENGINEERING CHANGE PAGE FOR CURRENT REVISION NUMBER

SEATTLE, WASHINGTON

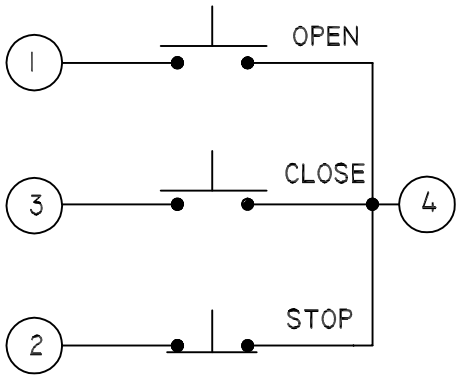

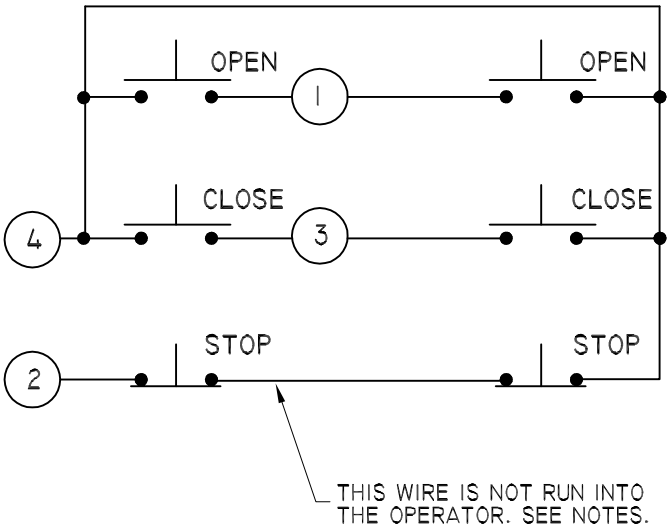

NOTE:

WIRING FOR ALL REMOTE 24 VAC CONTROL PUSHBUTTONS. EXCEPT HTG 320.

SINGLE BUTTON STATION REQUIRE 4 CONDUCTORS.

FIRST STATION IN MULTIPLE STATION GROUP REQUIRES FIVE CONDUCTORS (SEE EXAMPLE).

NOTE:

ON MULTIPLE STATONS BE SURE TO CUT JUMPER (CLOSE TO STOP) IN FIRST STATION AND ADD WIRE BETWEEN THE TWO STOP BUTTONS.

SINGLE BUTTON STATIONS
EXCLUDING OPERATOR MOUNTED

A

MULTIPLE BUTTON STATIONS
EXCLUDING OPERATOR MOUNTED

B

THE NUMBERS IN THE CIRCLES ARE WIRES THAT CORRESPOND TO THE CONTROL CIRCUIT. CONNECT THE PUSHBUTTON STATION TO THE TERMINAL STRIP INSIDE THE CONTROL BOX. MATCH WIRE NUMBER TO THE TERMINAL NUMBER.

Hy-Security Gate Operators
SEATTLE, WASHINGTON

TITLE
REMOTE 4 WIRE PUSHBUTTON WIRING

DRAWN DB	DATE 05/04/00	THIRD ANGLE PROJECTION		REV A
CHECKED -	DATE -	ERN NUMBER -	DATE -	
APPROVED -	DATE -	DRAWING NUMBER E57		SHT 1 OF 1

Hy-Security Gate Operators
Phone: 1-800-321-9947 • Fax: (206) 286-0614 • Web: www.hy-security.com • 1200 W Nickerson St • Seattle, WA. 98119

Electrical Circuit Options Applies to all operators except HTG 320 models

A Any Open Device or Free Detector

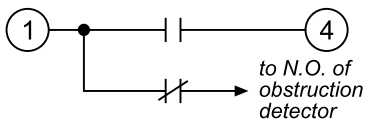

Any device used to open the gate, such as a pushbutton, key switch or detector, connects to #1 to #4. The gate will be held in the open position if contact is maintained.

B Closing Obstruction Sensor

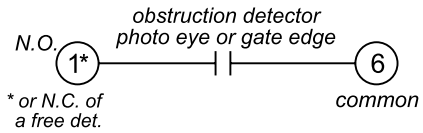

This input allows connection of an obstruction sensor to guard the closing of a gate. Connect the sensor output to #1 and #6. If the sensor is a vehicle detector and is used with a free detector, connect the N.O. of the obstruction detector to the N.C. of the free detector, as shown at left. If tripped while closing, the gate will reverse to the full open position.

C Opening Obstruction Sensor

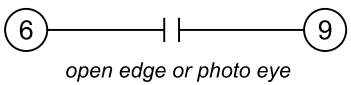

This input allows connection of an obstruction sensor to guard the opening of a gate. If tripped while opening, the gate will reverse slightly, and then self-disable for two seconds. Connect a N.O. contact (edge sensor or photo eye) to terminals #6 and #9.

D Open/Close Interface

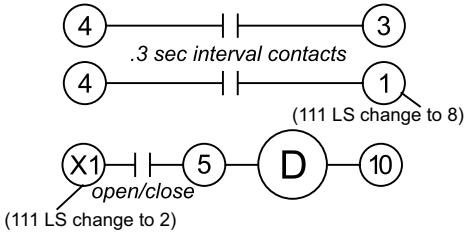

This special interface allows one contact, two-way control: the gate can be closed only after opening fully, but can be opened from any position. For 222SS models only, option D must be ordered with option E, Reverse Delay. Refer to the connection diagram for detailed wiring information.

E Reverse Delay

—not available on 111LS—
standard with all operators except 222SS

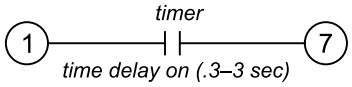

This option delays start in the open direction. It is also used to delay instant reverse. It can be added by itself or as part of several factory modifications necessary to convert operators to 'E' type. Remove the jumper between #1 and #7 when installing the reverse delay.

F Interlock & Relay

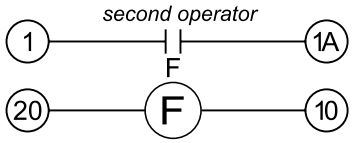

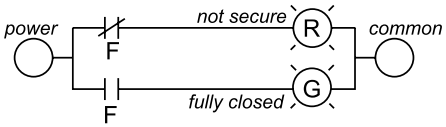

To interlock two Hy-Security machines connect a N.O. pole of the 'F' relay to the other operator (in all but the 111LS), and remove the jumper between #1 and #1A. In the 111LS, remove open limit wire #8 and wire in series with 'F' relay N.O to #8.

G Shadow Detector

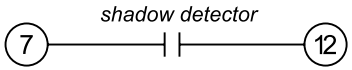

Swing gates require an additional loop and detector for the area under the arc of the gate. This detector can hold the gate when open, but is turned off when the gate begins to close.

H Heater

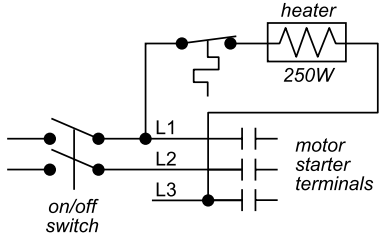

We recommend a heater be installed in colder climates; use one rated for the supplied voltage. Connect to terminals L1 and L3 of the motor starter. On 480 VAC systems an additional relay is required.

Hy-Security Gate Operators
Phone: 1-800-321-9947 • Fax: (206) 286-0614 • Web: www.hy-security.com • 1200 W Nickerson St • Seattle, WA. 98119

Long Range Pushbutton Control
Connection Diagram

Voltage loss over distance is caused as a function of control amperage multiplied by the resistance of the wiring, and may be expressed: Voltage loss = (**wire resistance**) X (**control amperage**). This limits pushbutton control wiring to the following schedule:

16 ga. wire= up to 125 feet max 12 ga. wire = up to 300 feet max
14 ga. wire = up to 200 feet max 10 ga. wire = up to 500 feet max

For applications requiring pushbutton controls from a long distance, or circuits of limited current, order the factory modification, long range interface. The following schedule indicates the improved control range using the long range interface:

16 ga. wire = up to 50 miles 20 ga. wire = up to 19 miles
18 ga. wire = up to 30 miles 22 ga. wire = up to 12 miles

FOR BEST PERFORMANCE
USE 20 GAUGE WIRE OR LARGER

Be certain to remove factory-installed jumper (#2 to #4) and also verify that no other external stop button is connected at #2 and #4.

When the long range interface option is used in conjuction with a pushbutton control, connect to the operator as shown below:

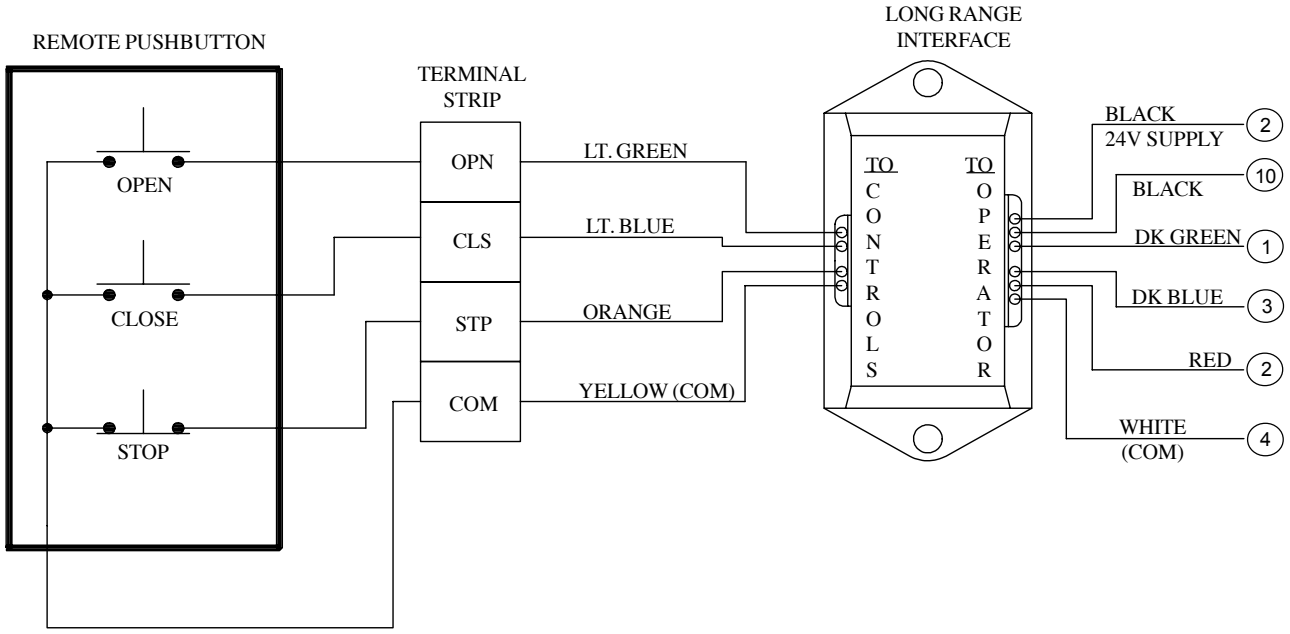

NOTE:
The part number for the long range interface, installed at the factory, A EIIF 001 OCS
The same part designation for the long range interface, in kit form, A EKIF 001 OCS

Hy-Security Gate Operators
Phone: 1-800-321-9947 • Fax: (206) 286-0614 • Web: www.hy-security.com • 1200 W Nickerson St • Seattle, WA. 98119

Master/Slave Interconnection Instructions

FOR ALL MODELS EXCEPT: HTG 320

Operation of two Hy-Security gate operators as a master/slave pair is simply a matter of correctly interconnecting the two control circuits. Join the following four wires from the master operator to the slave:

Terminal #1 master to terminal #1 slave,
Terminal #3 master to terminal #3 slave,
Terminal #4 master to terminal #4 slave,
*Terminal #10 master to terminal #10 slave

All stop control inputs must be connected to the master operator only. The slave operator must not have any connection between terminal #2 and terminal #4, such as a stop button or jumper.

*On DC battery powered operators, interconnect the black wires (-) to the on/off switch instead of the #10 wires. This prevents one operator from powering the other when the disconnect switch is off.

For assistance call your Distributor.

Hy-Security Gate Operators
Phone: 1-800-321-9947 • Fax: (206) 286-0614 • Web: www.hy-security.com • 1200 W Nickerson St • Seattle, WA. 98119

Conversion of Primary Operator Voltage

These instructions do not apply to conversions from single phase to three phase or vice versa. Conversion from one phase to another is not recommended.

Steps required to convert the voltage of an operator within the same phase:

1. *The overload must be changed to match the motor current at the new operating voltage.*
To do this, remove the overload device from the contactor by loosening the three screws T1, T2 and T3 on the contactor. Remove all the wires on the overload and replace them exactly the same position on the new overload. Mount and tighten screws firmly. Be certain the new overload is adjusted to match the motor nameplate amps that correspond to the new voltage. Note that the existing overload has sufficient range to accommodate adjustment from 208 volts to 230 volts or vice versa.

2. *The primary tap on the control transformer must be changed to the new voltage.*
This is accomplished by first reading the label on the top of the control transformer to determine which color primary lead corresponds to the new voltage to be used. Disconnect the existing primary lead (**Caution**: Do not disconnect the primary "Common" lead) and reconnect the primary lead to the same location.

3. *The power leads to the motor must be reconnected in the motor junction box to match the new voltage.*
You must remove the cover from the junction box on the electric motor. Reconnect the primary leads in the new configuration shown on the motor nameplate that matches the new voltage. Note this step does not need to be performed for conversion between 208 volts and 230 volts.

4.*The operator must be re-labeled to indicate the new voltage.*
Apply new labels to the operator so that the correct primary voltage is indicated.

5. To add a heater you need the following parts: (includes thermostat wire and all mounting hardware):

120 VAC	AEKHE 120 250
208-240 VAC	AEKHE 240 250
480 VAC (includes relay)	AEKHE 480 250

Hy-Security Gate Operators
Phone: 1-800-321-9947 • Fax: (206) 286-0614 • Web: www.hy-security.com • 1200 W Nickerson St • Seattle, WA. 98119

Installation Instructions For Gate Reversing Sensing Edge

1. Securely bolt the edge sensor to the edge of the gate. The edge should line up with the lower corner of the gate frame.

2. If the reversing edge is to wire directly to the gate operator:

A. Locate a mounting position for a curl cord attatchment, or retracting cord reel holder where there will be no possibility of the cord rubbing on the moving gate panel.

B. Attatch the cord to the gate in a position that is roughly near the position of the automatic operator, when the gate is closed.

C. Route the wires to the leading edge of the gate and join to the wires of the reversing edge. Wirenut and thoroughly tape the connections so that they are not prone to vibrate loose.

D. Join the fixed end of the cord reel or curl cord directly to terminal numbers 1 and 6 inside the control box of the operator.

3. If the reversing edge is to transmit to the gate operator:

A. Mount the reversing edge transmitter (Multi Elmac Model #3022, or equivalent) onto the gate panel near the upper corner of the leading edge of the gate.

B. Join the wires of the reversing edge to the two terminals inside of the edge transmitter. Set a unique code on the "DIP" switches inside the transmitter. Remount the cover of the transmitter and tighten the screws firmly so that no water will leak inside.

If a receiver for the reversing edge has been prewired inside the operator, proceed directly to step #3D.

C. Mount a commercial style radio receiver* (one with a connector for an external antenna) on the inside of our operator enclosure. Connect the 24 Volt supply wires to terminal numbers X1 and 10 on the terminal strip. Connect the radio contact wires to terminal numbers 1 and 6 on the terminal strip.

D. Mount an external antenna onto the top of a fixed post of the fence near the operator. Connect the antenna into the socket on the radio receiver.

E. Set the "DIP" switches in the receiver to match the same code used in the edge transmitter.

*If there is also to be a radio receiver for a hand held transmitter to operate the gate, be certain to use a two channel commercial receiver.

4. Test the operation of the reversing edge to be certain that it is functioning. Advise the user of the gate to be certain to retest this vital function weekly.

Hy-Security Gate Operators
Phone: 1-800-321-9947 • Fax: (206) 286-0614 • Web: www.hy-security.com • 1200 W Nickerson St • Seattle, WA. 98119

EMERGENCY OPERATION PROCEDURES FOR VERTICAL LIFT GATE OPERATOR

The procedure for manual operation of the vertical lift gate in case of power failure or a serious malfunction is as follows:

1. Turn off all electrical power to the controller.

2. Remove the lower access covers on both posts.

3. Remove the Allen head bolt in the three inch sprocket at the end of the hydraulic motor in each post. The gate will now operate like an old "sash weight" type window, with friction as it's only resistance.

4. Be certain to tie a rope to the bottom of the gate panel so it can be pulled down again.

5. When the automatic operation is again ready, reverse the above procedures.

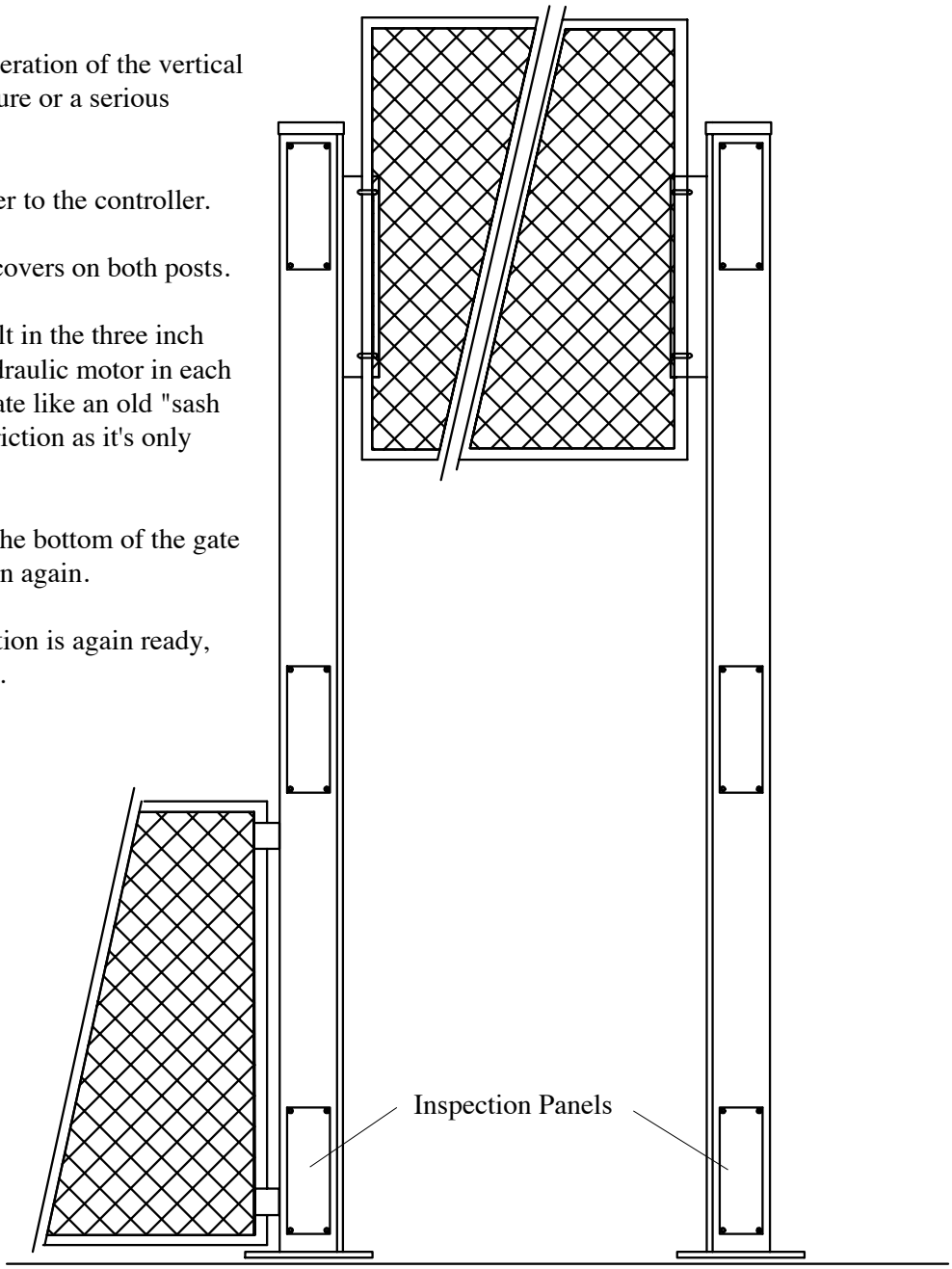

Hy-Security Gate Operators
Phone: 1-800-321-9947 • Fax: (206) 286-0614 • Web: www.hy-security.com • 1200 W Nickerson St • Seattle, WA. 98119

MAINTENANCE PROCEDURES
HVG VERTICAL LIFT GATE OPERATOR

After proper installation of the vertical lift gate operator, very little maintenance will be required to insure long and trouble free operation.

MONTHLY:

1. The primary maintenance procedure will be to maintain the drive chain tension. The tension can easily be checked: Operate the gate to the full open position. Grasp the chain that connects the bottom of the bogie to the bottom of the weight cage and pull it outward. The chain should always feel somewhat taut, it should never be loose. This is especially important when the operator is new.
   - A. To expose the chain tension adjustment area, remove the middle access cover (about three feet above the ground) and raise the gate to full open.
   - B. Locate the two threaded rods connected to the top of the weight cage. Loosen the locking nuts on top of the cage and tighten the nuts on the top inside of the cage. Be sure to tighten the nuts an equal amount in order to keep the load balanced between the two chains. Tighten the lock nuts.

SEMI-ANNUALLY:

1. Each king post has four bearings with grease fittings. These should be greased semi-annually.
2. Check the balancing cable for correct tension. They should neither sag nor greatly compress the spring at the top of each post. Also inspect the cables for fraying or snagging, especially where they lay on the sheaves when the gate is closed.
3. Inspect the cable sheaves to make certain they rotate freely.
4. Check the oil level in the reservoir at the hydraulic pump. It should always be at least 3/4 full. Generally the oil level should not change. A change would indicate a leaky hose, a serious problem that must be found and corrected.
5. Apply a light oil to all the chains.

Hy-Security Gate Operators
Phone: 1-800-321-9947 • Fax: (206) 286-0614 • Web: www.hy-security.com • 1200 W Nickerson St • Seattle, WA. 98119

Operator Maintenance

Hydraulic System

Fluid Level: Under normal conditions, hydraulic systems do not consume oil. Before adding any oil, check the system thoroughly for leaks. Remove the bright metal plug in the tank, fill to plug level, then replace plug. We recommend our *Uniflow* hydraulic oil, part number H-004, which is sold in one gallon containers by our distributors. Automatic transmission fluid may be used, although its performance in cold weather will be sluggish unless the operator is well heated. *Do not use brake fluid.*

Look for leaks: Occasionally there may be slight seeping at the fittings after some usage. Tightening of the fittings will usually correct the problem. If the leaking persists, replace "O" rings, fittings or hoses, if required. No further leaks should occur.

Oil Change: A hydraulic system does not foul its oil, unlike a gas engine, so oil changes do not need to be frequent. Rather, heat breakdown is the main concern in a hydraulic system. If the unit is subjected to high use, especially in a warm climate, change the oil more frequently. In general, we recommend draining the reservoir and replacing the oil at five or ten year intervals.

There are several ways to change the hydraulic oil, depending on the type of operator being serviced. If you don't know how to drain the oil, contact your distributor for directions. Refill with new *Uniflow* hydraulic oil (available from your distributor). To avoid overfilling, never pour into the port where the black breather cap is located. Instead, remove only the bright metal plug in the tank. Slowly pour the oil into the tank until the oil is within one inch of the filler port. Replace the plug and wipe up any spilled oil.

Cold Weather:

1. Check that your reservoir is filled with *Uniflow* high performance oil.
2. Ice can partly or totally jam gate operation. Check by operating the gate manually.

Electrical Controls

Before servicing, turn off power disconnect switch

No routine maintenance is needed for the electrical system or controls. If the environment is very sandy or dusty, seal all holes in the electrical enclosure. Blow dust out of the electric panel with compressed air. A qualified electrician may troubleshoot with the aid of the electrical drawings in Appendix 4.

If it is necessary to call a distributor for assistance, be sure to have your model and serial number ready. Other helpful information would include the name of the job, approximate date of installation, and the service record of the operator, especially any work that has been done recently. Be prepared to describe as exactly as you can what the machine is or is not doing. Describe any unusual sounds or location of oil leaks.

How to Adjust the Pressure Relief Valve: To check your relief valve setting, first disconnect one of the hoses. Run the operator either open or closed (the gate will not move with the hose disconnected. The relief valve is found on the rear of the hydraulic power unit. It has a hex adjusting head and lock nut. To adjust, loosen the lock nut and screw the threaded bolt clockwise for increased pressure, counterclockwise to decrease pressure.

MODEL	FACTORY SETTING
111 Series	*750 psi*
SS, E Models	*1000 psi*
EX Model	*1300 psi*
444 Series	*1300 psi*

Do not attempt to use the relief valve as an entrapment protection device. Photocells or gate edges are the best methods to protect pedestrians and reserve power to the drive gate.

Hy-Security Gate Operators
Phone: 1-800-321-9947 • Fax: (206) 286-0614 • Web: www.hy-security.com • 1200 W Nickerson St • Seattle, WA. 98119

HVG 420 Vertical Lift Gate Operator Parts

2	HMOMO 012 WRS	Hydraulic Motor W/Quick Disc. Fittings
X	HSFHO 004	3/8” Hydraulic Hose, with Fittings
X	HSFQD 004 P	1/4” Quick Disconnect (Plug)
X	HSFQD 004 S	1/4” Quick Disconnect (Socket)
1	HMAMA 222 BVK	Manifold, “E” Type Less Valves
1	HVABY 001 CRT	Manifold Bypass Valve Cartridge
1	HVADI DEL 2P	Hydraulic Directional Valve Cartridge (2 Pos)
2	HVABK CCG LDN	Hydraulic Brake Vlave Cartridge
1	HASGA 300 SM	Pressure Gauge (3,000 P.S.I)
2	MVLSV 001 5.0	5” Plastic Double Cable Sheave
2	MTBTC 001	1/8” Cable with End Fittings
8	MPTBE 020	UHMW Angle Glide for Bogie
8	MPTBE 025	1” Tapped Base Pillow Block Bearing
2	MVLSP 420 T-R	Top Shaft and Sprocket Assembly (2 Sprockets)
2	MVLSP 420 B	Bottom Shaft and Sprocket Assembly (3 Sprockets)
1	MPTSP 001 3B12	#35-12 Tooth Limit Release Sprocket
1	MPTSP 400 R	#40-19 Tooth Quick Release Sprocket
140’	MPTRC 040	#40 Roller Chain, Plated
X	MPTRC 035	#35 Roller Chain, Plated (Limit Switch)
X	MPTRC 040 CON	#40 Master Connecting Link
12	MPTRC 040 OFF	#40 Offset Connecting Link
2	MVLBO 420	Bogie (Gate Mount for HVG 420)
2	MVLWC 420	Weight Cage (for HVG 420)

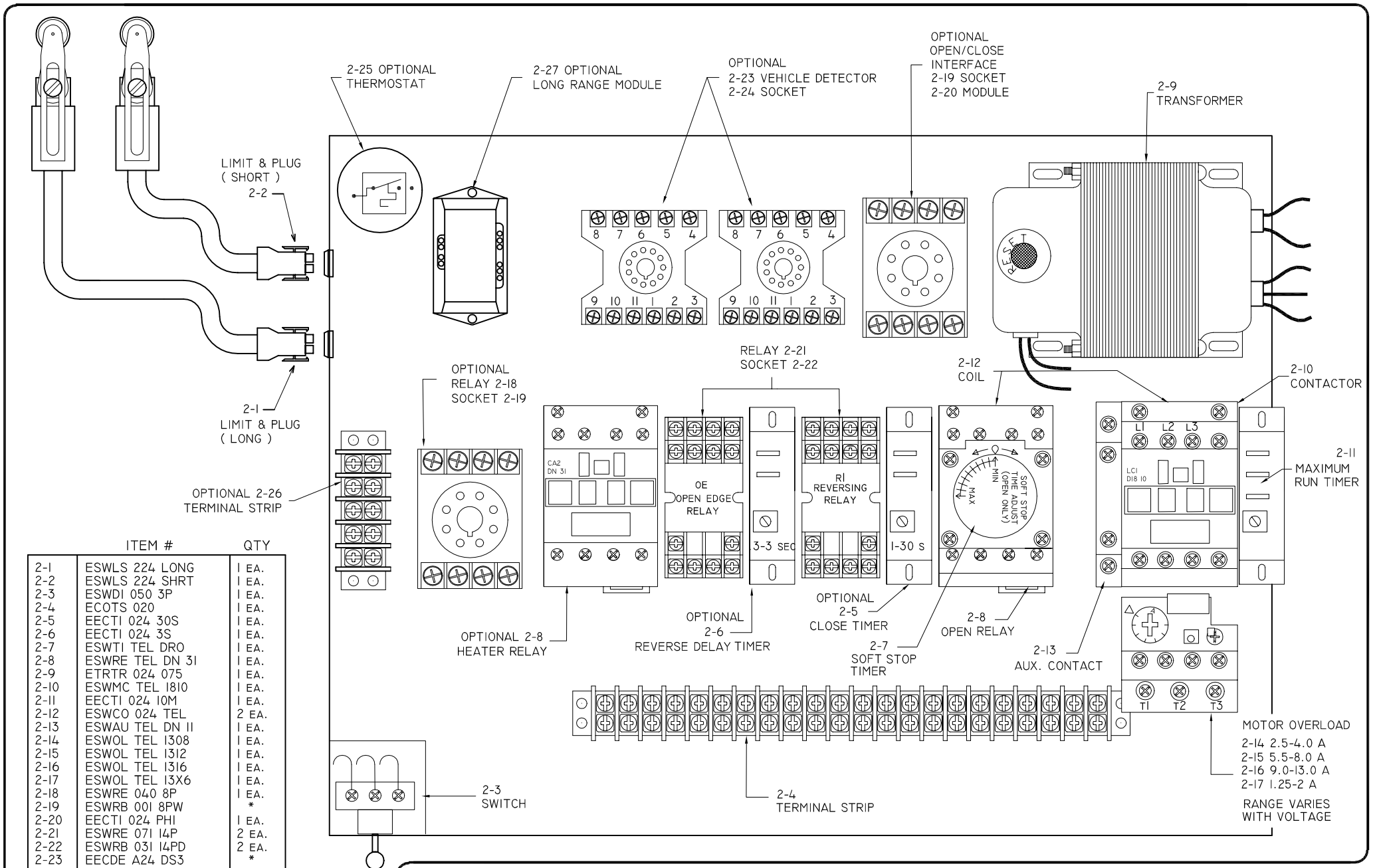

ITEM #		QTY
2-1	ESWLS 224 LONG	1 EA.
2-2	ESWLS 224 SHRT	1 EA.
2-3	ESWDI 050 3P	1 EA.
2-4	ECOTS 020	1 EA.
2-5	EECTI 024 30S	1 EA.
2-6	EECTI 024 3S	1 EA.
2-7	ESWTI TEL DRO	1 EA.
2-8	ESWRE TEL DN 31	1 EA.
2-9	ETRTR 024 075	1 EA.
2-10	ESWMC TEL 1810	1 EA.
2-11	EECTI 024 10M	1 EA.
2-12	ESWCO 024 TEL	2 EA.
2-13	ESWAU TEL DN 11	1 EA.
2-14	ESWOL TEL 1308	1 EA.
2-15	ESWOL TEL 1312	1 EA.
2-16	ESWOL TEL 1316	1 EA.
2-17	ESWOL TEL 13X6	1 EA.
2-18	ESWRE 040 8P	1 EA.
2-19	ESWRB 001 8PW	*
2-20	EECTI 024 PHI	1 EA.
2-21	ESWRE 071 14P	2 EA.
2-22	ESWRB 031 14PD	2 EA.
2-23	EECDE A24 DS3	*
2-24	ESWRB 030 11PW	*
2-25	EACTH B10 019	1 EA.
2-26	ECOTS 005	1 EA.
2-27	EECRE 003 024	1 EA.
*	QTY. & USE VARIES	*

Hy-Security Gate Operators
SEATTLE, WASHINGTON

TITLE
ELECTRICAL COMPONENTS HVG, HRG 444, 333 & 222
(ALL MODELS, EXCEPT FOR DC MODELS)

DRAWN	DATE	THIRD ANGLE PROJECTION		REV
DB	05/12/00			A
CHECKED	DATE	ERN NUMBER	DATE	
-	-	-	-	
APPROVED	DATE	DRAWING NUMBER		SHT / OF
-	-	SS40T		1 / 1

LIMITED WARRANTY

(Hydraulically Powered Operators)

Hy-Security Gate Operators warrants all of its manufactured products to the end-user to be free of defects in material and workmanship. The model 111LS is warranted for a period of three years from date of shipment. **All other hydraulic operators are warranted for a period of five years from date of shipment.** Drive wheels for slide gate operators are warranted for a period of two years. Batteries in DC operators and individual replacement parts (that are a design component of the gate operator) are warranted for one year from the date of shipment. Even though included as part of a Hy-Security gate operator, accessories carrying another manufacturers name plate, (unless a design component of the gate operator) shall carry only the warranty of the specific manufacturer.

Any modification made to factory products will void the warranty unless the modifications are approved in writing by the factory, in advance of the change. This exclusion does not apply to normal installation of approved accessories and/or safety devices. This warranty shall not apply to equipment which has been improperly installed, subjected to negligence, accident, damage by circumstances beyond Hy-Security Gate Operators' control, or because of improper operation, maintenance, storage or to other than normal use or service.

Labor to install new parts or remove defective parts, travel time, or standby time is specifically excluded from this warranty. Freight (surface or air) and all other incidental costs are NOT covered by this warranty. There are no obligations or liabilities on the part of Hy-Security Gate Operators for consequential damages arising out of, or in connection with, the use or performance of this product. Hy-Security Gate Operators assumes no responsibility for other indirect damages with respect to loss of property, profit or revenue. This Limited Warranty is valid only in the 50 United States, the District of Columbia and the Commonwealth of Puerto Rico. Implied warranties, including those of merchantability and fitness for a particular purpose or application, are limited to one year from date of shipment.

Defective products that are in warranty should be returned to our factory. At our option, we may elect to repair or replace, free of charge, any such parts. An invoice will be sent at the time replacement parts are shipped, and a credit will be issued only after the parts have been returned undamaged and accepted as defective. No warranty credits will be allowed without written permission from the factory, and the return of the defective part, together with a completed Merchandise Return Form (see our Terms of Sale policy for additional details on the return procedure.) Replacement parts shall carry the remainder of the original limited warranty or 90 days, whichever is longer.

This Limited Warranty gives you specific rights. You may have others, which vary from state to state. This Hy-Security Gate Operators' limited warranty is in lieu of all other

warranties expressed or implied. This Limited Warranty supersedes all other warranties.